ASSEMBLY INSTRUCTIONS

PARTS LIST:
SEAT WITH SWIVEL ATTACHED - 1
LEG ASSEMBLY - 1
MACHINE SCREWS - 4
LOCKING NUTS - 4

TOOLS REQUIRED:
PLIERS

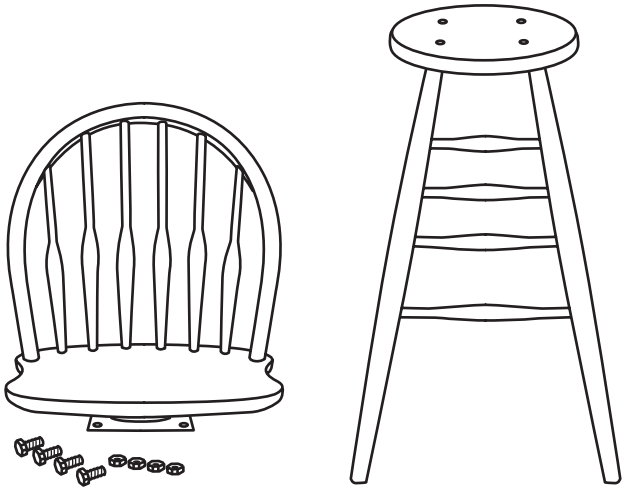

INSERT THE 4 MACHINE SCREWS AS SHOWN BELOW THROUGH SWIVEL

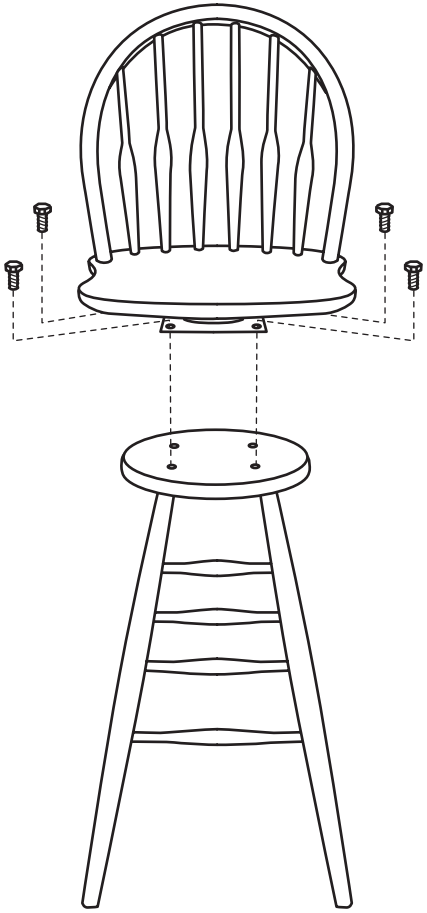
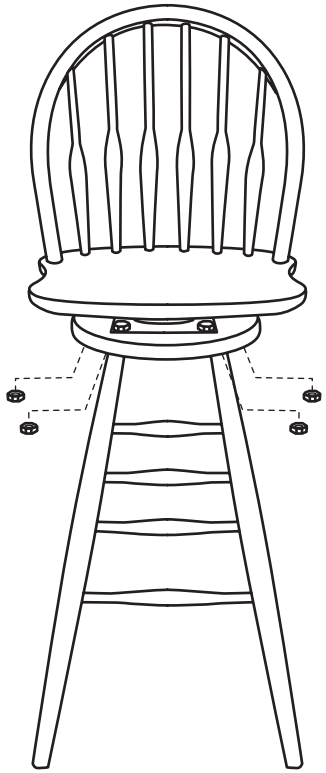
ATTACH 4 LOCKING NUTS AND TIGHTEN