ASSEMBLY INSTRUCTIONS

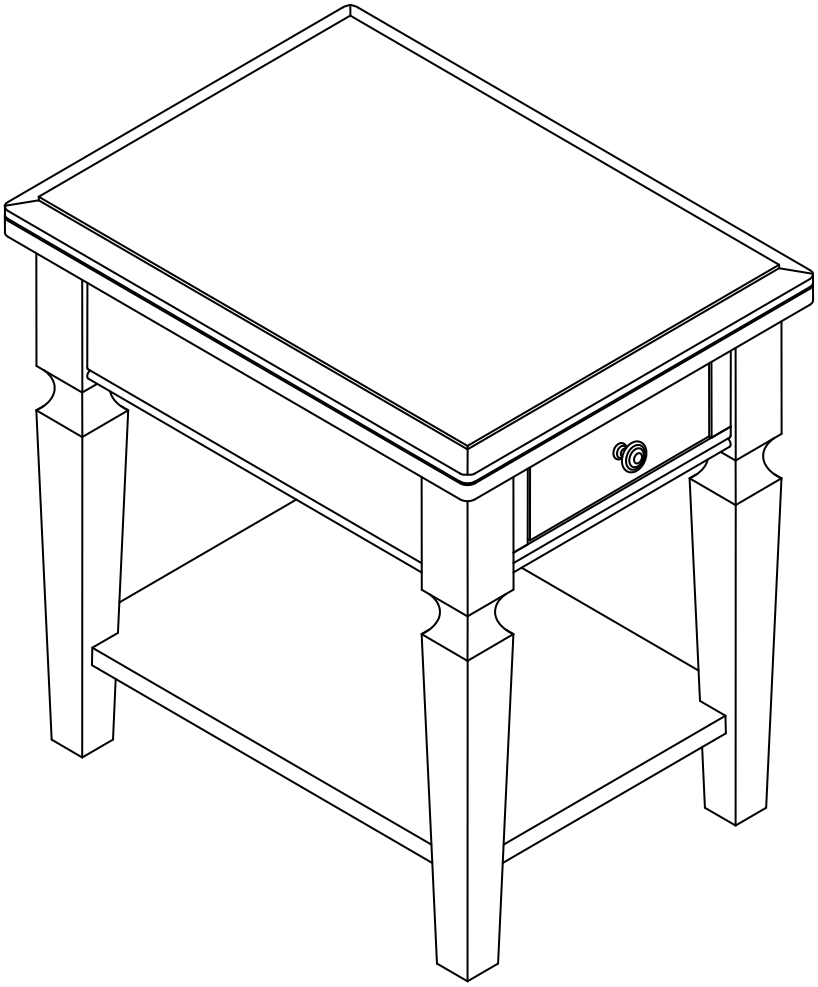

Description : VISTA END TABLE
Item No. : OT-15E

ITEM NO.: OT-15E
ISSUED NOV 21, 2018
Printed in Vietnam

BEFORE ASSEMBLY

Thank you for purchasing this quality product. This product has been designed for easy assembly and constructed for durability. All parts were checked prior to packaging to insure quality. Prior to beginning assembly, however, make sure all parts and hardware are included and free of obvious defect. If a part is missing or defective, please contact the store where purchased. If hardware is missing, or you need help with assembly, please call toll free 888-944-8396.

IMPORTANT NOTE:

- Place all wooden parts on a clean and smooth surface such as a rug or carpet to avoid the parts from being scratched.
- Remove all wrapping material, including staples & packing straps before you start to assemble.
- DO NOT tighten all screws and bolts until completely assembled.
- Keep all hardware parts out of reach of children.

WARNING:

Long exposure to rubber or soft plastic may cause a chemical reaction and damage the finish of your table. Protect the surface of the table with cloth if you are using any product with rubber feet or base.

ASSEMBLY TOOLS REQUIRED

NOT INCLUDED

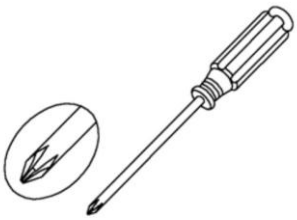

PART LIST

When unpacking, please be careful not to discard any parts with the packaging. Before continuing, please make sure you have the following parts:

NO	Description	Qty	Sketch	NO	Description	Qty	Sketch
A	Top	1	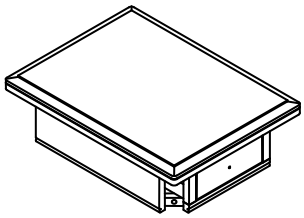	**B**	Leg (L-R)	4	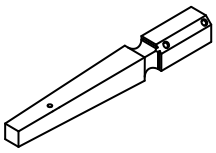
C	Bottom shelf	1	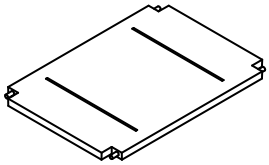				

HARDWARE LIST

When unpacking, please be careful not to discard any parts with the packaging. Before continuing, please make sure you have all of the following hardware:

NO	Description	Qty	Sketch	NO	Description	Qty	Sketch
1	**METAL KNOB** (Φ32 x 28mm)	1	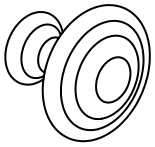	**5**	Flat Washer (Φ8.5 x 19mm)	8	
2	Pan head screw (M4 x 22mm)	1		**6**	Short Screw (Φ3.5 x 15mm)	8	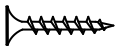
3	Bolt (M8 x 50mm)	8	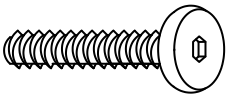	**7**	L-bracket	4	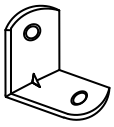
4	Lock Washer (Φ8.5 x 13mm)	8		**8**	Allen Key (M4 x 30mm x 110mm)	1	

ITEM NO.: OT-15E **Printed in Vietnam**
ISSUED NOV 21, 2018

STEP 1

Remove the drawer. Attach the legs (B) to top (A) with bolts (3), and washers (4) and (5) as shown below. Tighten with Allen key (8).
Insert shelf (C) into legs (B) as shown below.

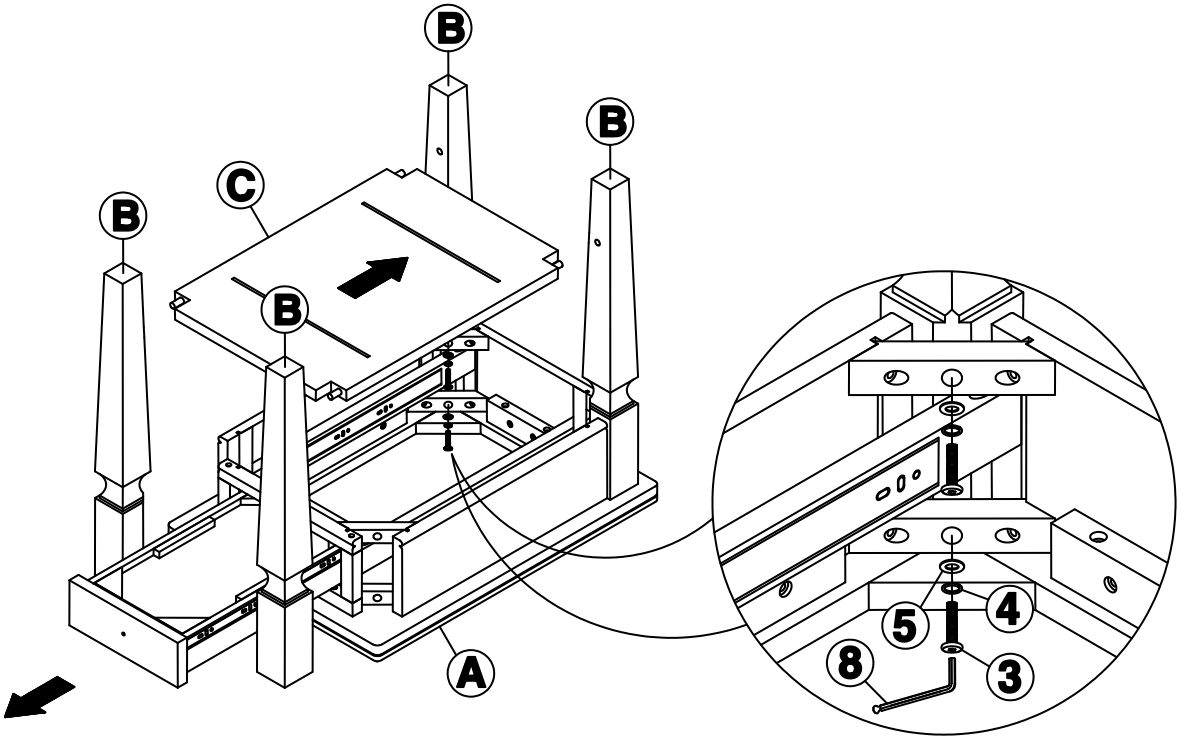

STEP 2

Attach shelf (C) to legs (B) with brackets (7) and screws (6) as shown below. Tighten with a screwdriver.

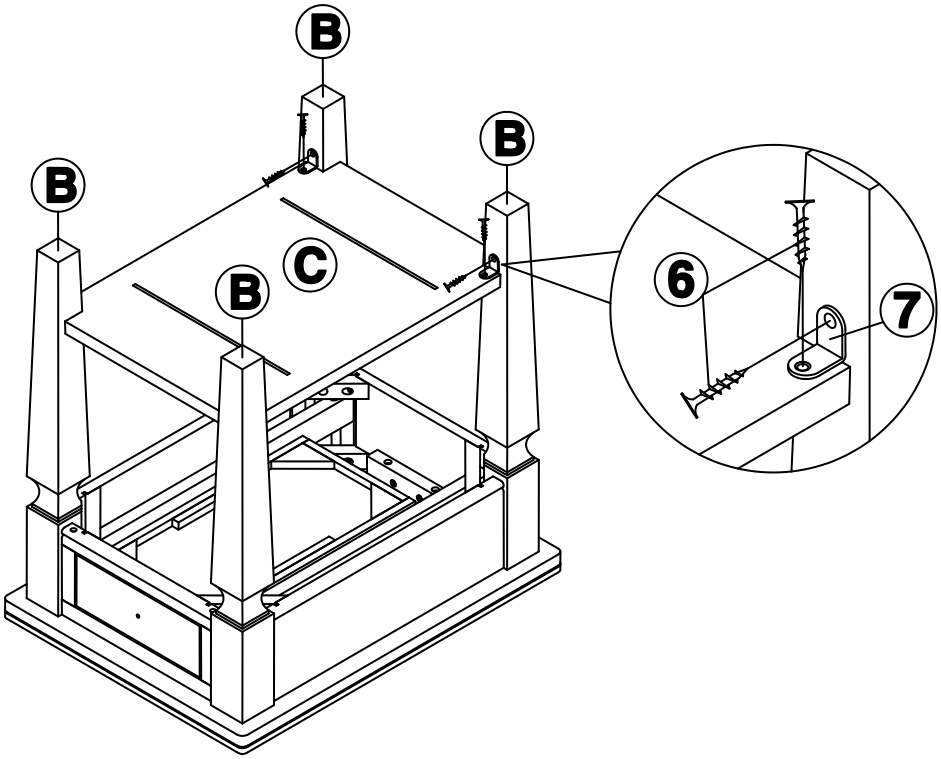

ITEM NO.: OT-15E **Printed in Vietnam**
ISSUED NOV 21, 2018

STEP 3
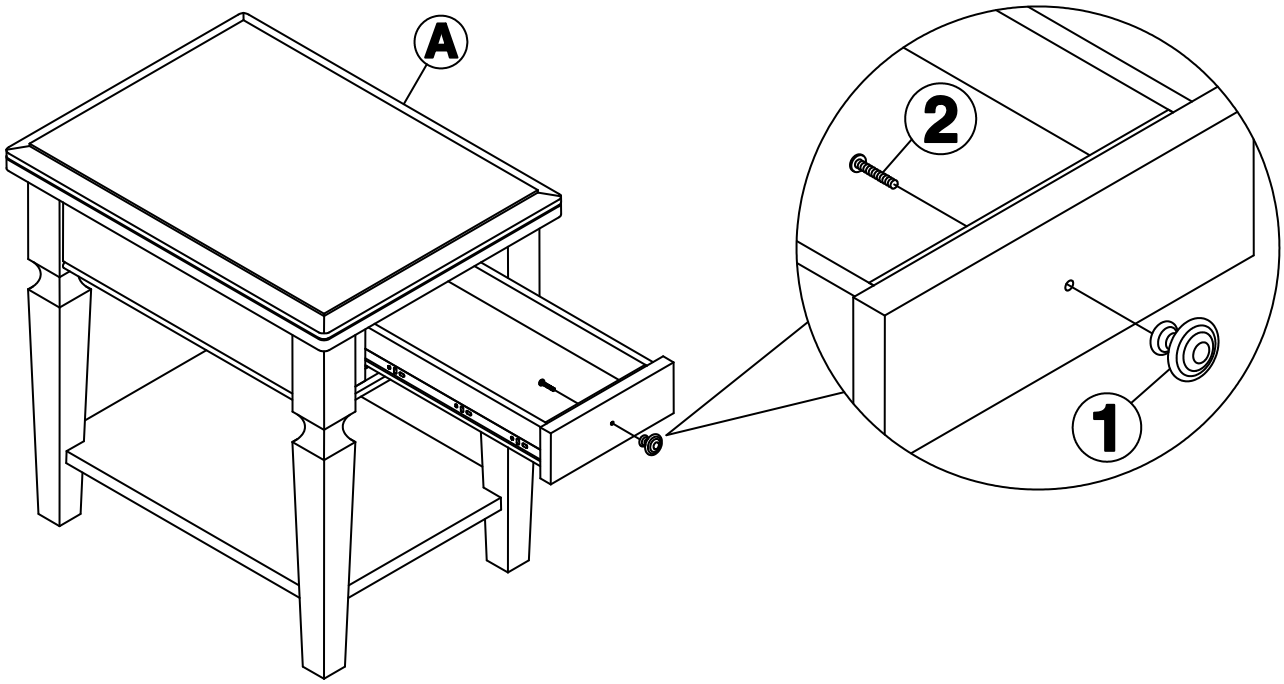
Attach knob (1) to front of drawer with pan head screw (2) as shown below. Tighten with a screwdriver.